v1.0 / 23/01/2019
EN

Mitglied im...
Member of...
INDUSTRY BUSINESS NETWORK 4.0

ECKERT

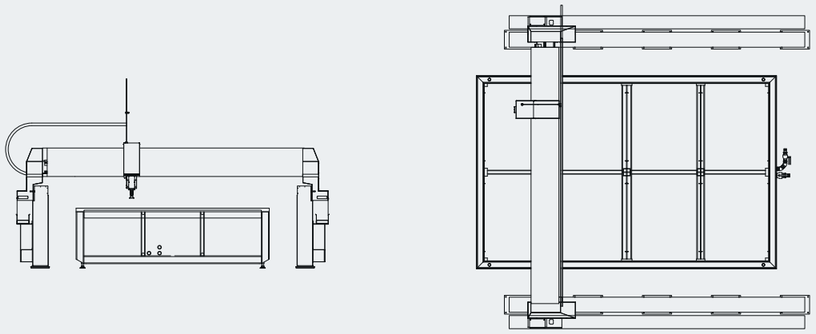

MODEL	OPAL WATERJET
Drives	Servo AC
Cutting width	1000 - 6000 mm
Basic working length	1000 - 12000 mm
Cutting thickness - Waterjet 2D	0,5 - 250 mm
Cutting thickness - Waterjet 3D	0,5 - 150 mm
Positioning speed	25000 mm/min
Positioning accuracy	±0,025 mm
Safety standard	EN 13850

ADDITIONAL EQUIPMENT

- PRO-X 3D head
- Galvanized steel water table
- Stainless steel water table
- Dynamic water level
- Drilling
- Abrasive cutting
- Bricks
- Light grid for water tank
- Water softening system
- Fleece Filter
- Cascade filter
- Light barriers

WATER

The manufacturer reserves the right to make changes and/or improvements without notice.

SOFTWARE

ECKERT CAD/CAM

IGEMS

lantek

And many more...

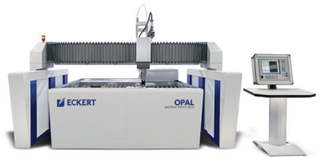

ECKERT

Pawicka 4c, 59-220 Legnica, Poland
tel: +48 (76) 856 09 28, fax: +48 (76) 852 20 78
eckert@eckert.com.pl

www.eckert.com.pl

OPAL WATERJET

Versatile and precise waterjet cutting

WATER

OPAL WATERJET

1 2D CUTTING HEAD

2-axis waterjet cutting head Allfi is utilising proven in practice hydro-abrasive cutting technology. Well designed construction head equipped with height sensor and anti collision device guarantee the best quality cuts and faultless operation.

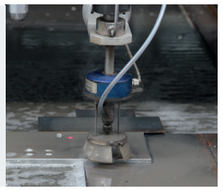

2 PRO-X 3D HEAD

5-axis Pro-X 3D head provides a very high level of efficiency and insures the achievement of maximum 3-dimensional precision. The maximum cutting angle +/- 60 and automatic angle compensation ensure great precision and practically zero angle on the cutting edge. Perfect tool to minimize post processing.

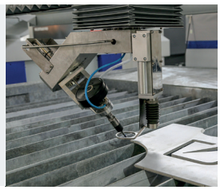

3 WATER TABLE

Opal Waterjet cutting machine is equipped with the robust water table with double grid system. Steel, fully tinned* construction insures durability and corrosion resistance. The detached table construction ensures maximum stability and smooth running operations.

*additional option

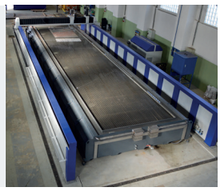

4 CNC CONTROLLER

The most modern i-Vision Controller is the high quality industry machine has Corning® Gorilla® Glass's touchscreen. Efficient parts and the strong construction ensures reliability Onyx working. Many functions of own software and simple controller's interface let to use all of machine's possibilities. Standalone controller delivers the unique comfort and safety of machines operator. It make also possible to watching the cutting process and controller's using at the same moment.

5 CONSTRUCTION

Opal Waterjet has gantry construction. The machine is made from steel closed profiles which ensure great stability. Rail elements where protected against harmful influence of water with protective bellows or covered by aluminium parts. Relatively low weight of the gantry and specially grounded racks furnishes our Opal Waterjet with excellent dynamics and high precision motors boosts accurate positioning.

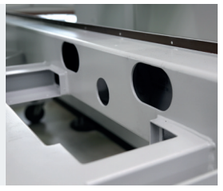

CHARACTERISTICS

Opal Waterjet cutting machine was created in response to the need of obtaining smooth, high quality finish with no heat-affected zone or thermal distortion. Utilisation of waterjet cutting allows work with a wide variety of materials such as: stone, wood, plastics etc. up to 250 mm thickness. Optional use of PRO-X 3D cutting head widens design capability of the machine by 3D operations.

MAIN FEATURES

- Versatility
- There are no dust as a by-product of cutting
- Abrasive or pure water cutting
- Waterjet cutting system can operate with up to four cutting heads at a time
- Customised high pressure pump adjustment
- Dross free cutting minimizes post processing

STANDARD HIGH PRESSURE PUMPS

BFT	ECOTRON 40.22	ECOTRON 40.30	ECOTRON 40.37	ECOTRON 40.45+	SERVOTRON 40.37	SERVOTRON 40.45+
Power [kW]	22	30	37	45	37	45
Max. flow [l/min]	2,3	3,4	3,8	4,3	3,8	4,6
Pressure [bar]	4000	4000	4000	4000	4000	4000

KMT	TL-I 30	NL-I 40	JL-I 50	SL-VI 30 PLUS	SL-VI 50 STD	SL-VI 60 PRO-III
Power [kW]	22	29	37	22	37	45
Max. flow [l/min]	3,1	2,7	3,8	2,6	4,3	6,0
Pressure [bar]	3800	3800	3800	4136	3800	6200

UHDE ThyssenKrupp	HPS 4022	HPS 4037 HPD 4037	HPD 4055	HPD 4075	HPS 6045 HPD 6045	HPD 6090
Power [kW]	22	37	55	75	45	90
Max. flow [l/min]	2,3	3,8	5,7	7,6	2,8	5,4
Pressure [bar]	3800	3800	3800	3800	6000	6000

The manufacturer reserves the right to make changes and/or improvements without notice.

Presented machine is supplied with additional equipment.